MOTOR SUMMIT 2020 International
JOIN US FROM HOME VIA LIVE STREAM

HITACHI
Inspire the Next

Motor Summit 2020 International

Efficient Motor Technology with Low Loss Soft Magnetic Material

11/18/2020

Hirooki Tokoi

Research & Development Group
Hitachi, Ltd.

HITACHI
Inspire the Next

Contents

1. Introduction of Amorphous Motor

2. Study for Further High Efficiency

3. Deployment to Radial Gap Type Motor

4. Conclusion

HITACHI
Inspire the Next

1. Introduction of Amorphous Motor

1-1 Demands of High-efficiency of Motor

HITACHI
Inspire the Next

High efficiency motors are required to decrease electric power consumption.

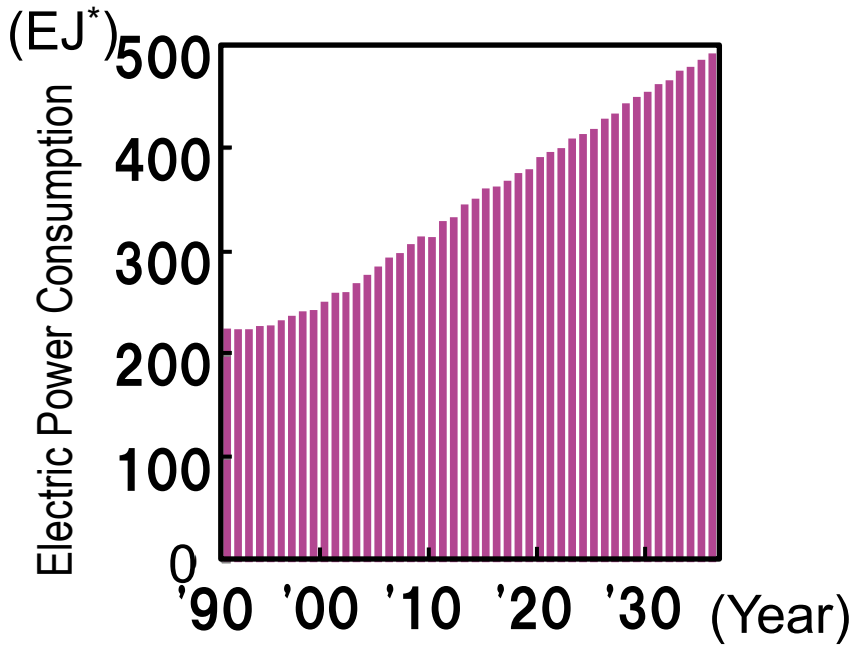

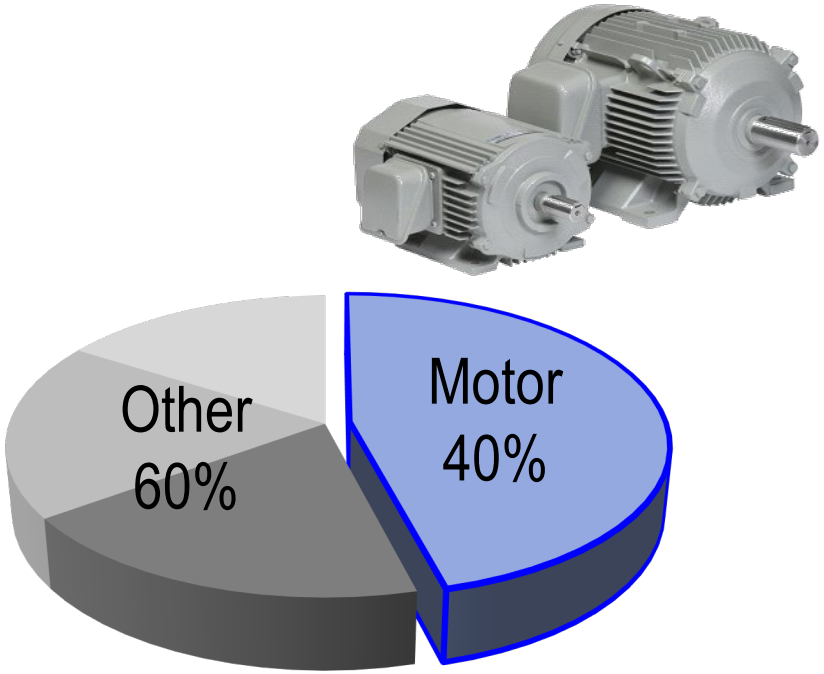

*1EJ=10^{18}J

World's electric power consumption

References :
1) IAE-0919107 (2009), Agency for Natural Resources and Energy
2) Energy-efficiency policy opportunities for electric motor-driven systems, IEA ('11)

1-2 Magnetic Characteristics of Soft Magnetic Materials

HITACHI
Inspire the Next

Amorphous metal has a very small iron loss. High Bs nanocrystal has both low loss and high magnetic flux density

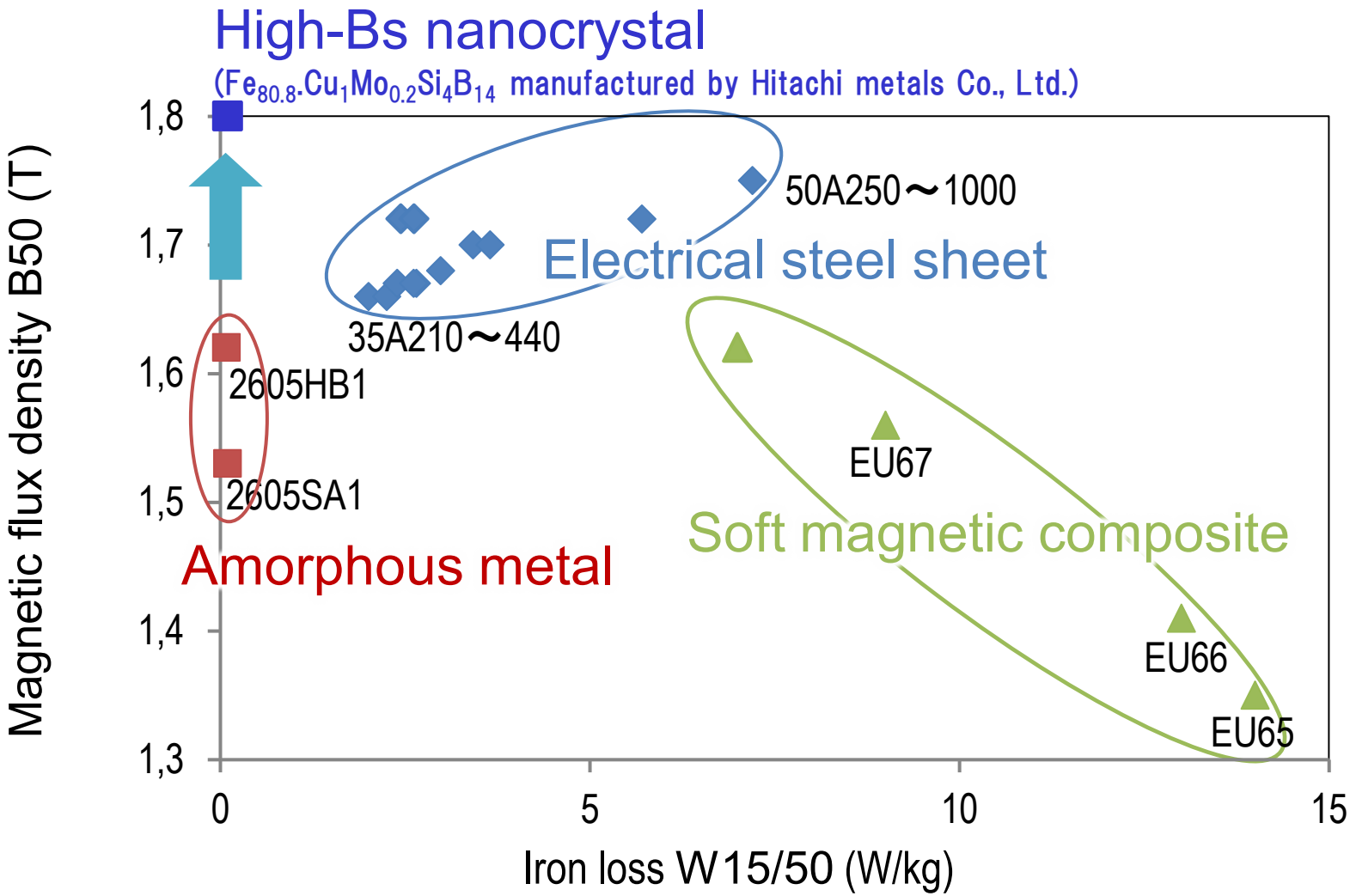

1-3 Issues when using amorphous metal in motors

HITACHI
Inspire the Next

Amorphous metal is difficult to make into a motor core due to its "hardness" and "thinness".

Characteristics of materials

	Electrical steel sheet	Amorphous metal
Material appearance		
Loss (ratio)	1	1/10
Thickness (mm)	0.1～1.0	0.025
Hardness (ratio)	1	5～10

Issues when using motors

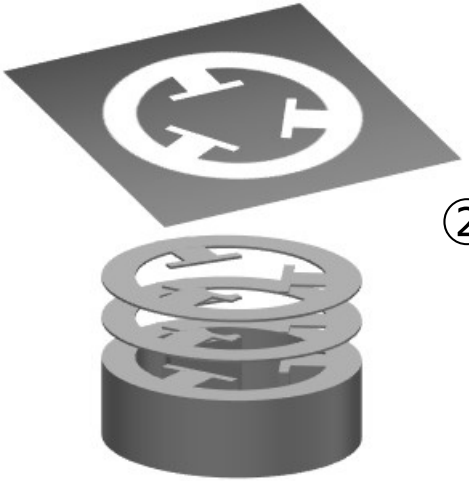

Press working image

①Increased processing times (15-20 times)
②Reduced mold life (1/50)
③Thin film strip post-processing
④Degradation of magnetic properties due to processing

Amorphous materials require a **"new iron core structure"** that can be easily processed.

1-4 Technology for stacking amorphous metal

HITACHI
Inspire the Next

Established a method to laminate amorphous metal by shearing

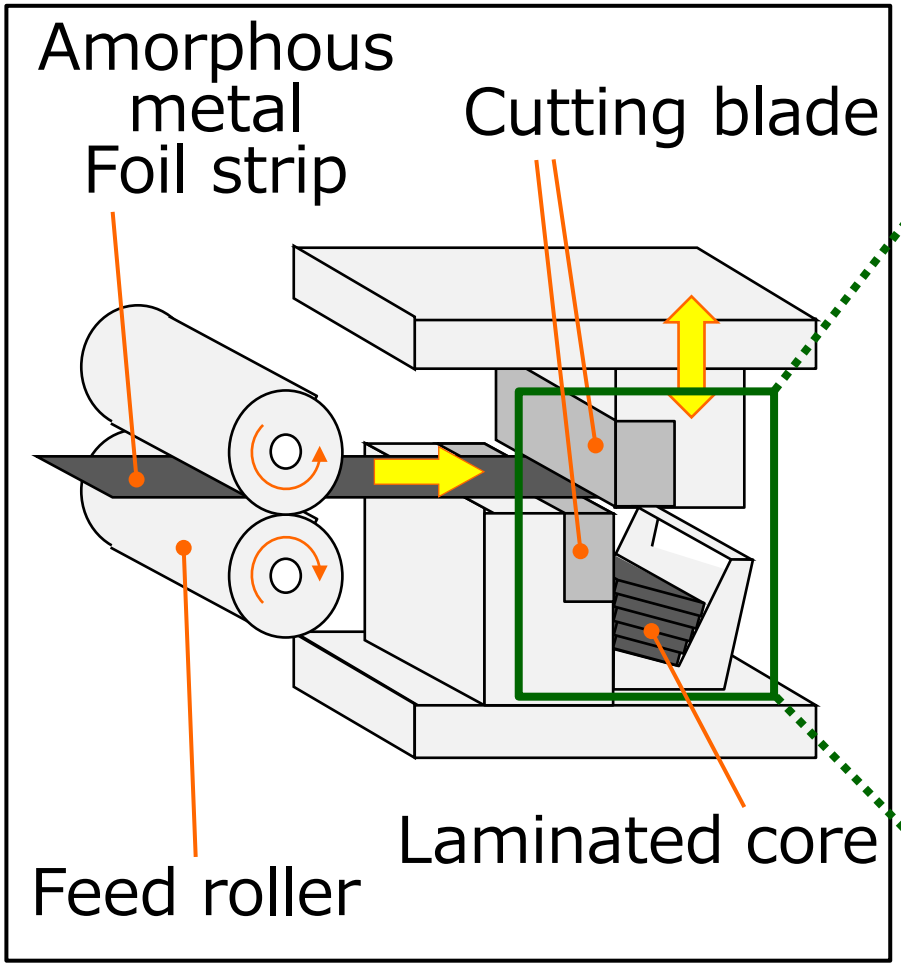

Manufacturing equipment image

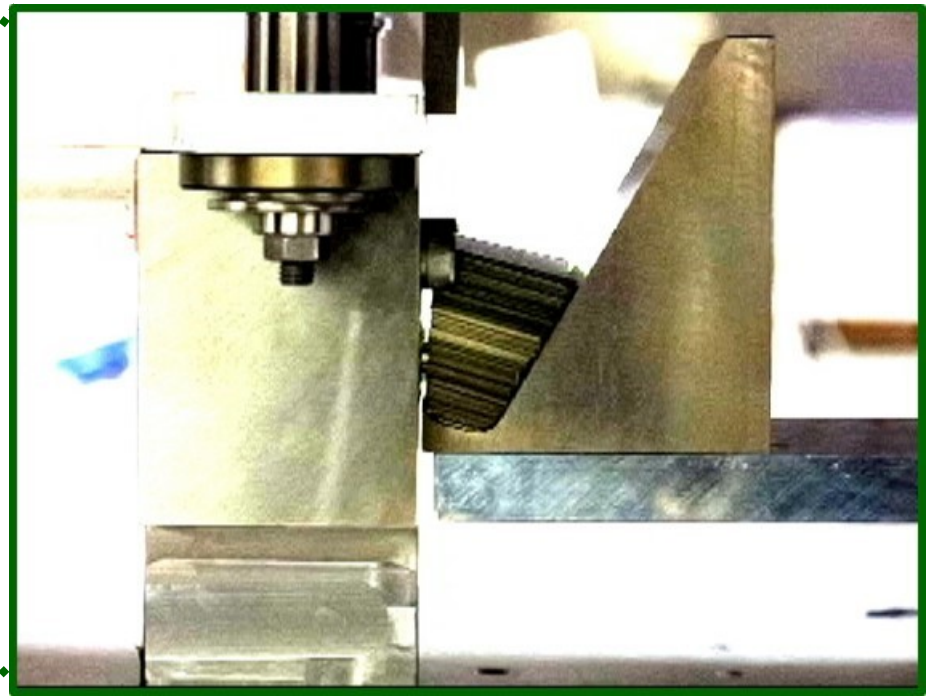

Experimental machine

1-5 Hitachi's Amorphous Motor

HITACHI
Inspire the Next

Axial-flux type motor with amorphous core leads to high efficiency.

Motor structure: Axial-flux type

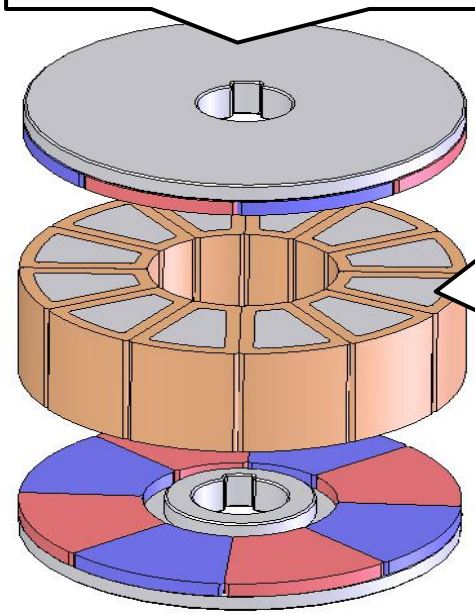

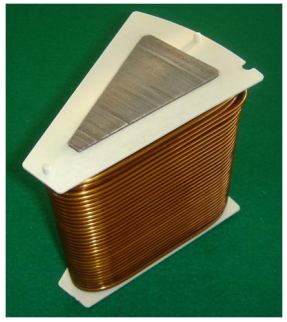

Laminated core:
Amorphous metal

Structure of amorphous motor

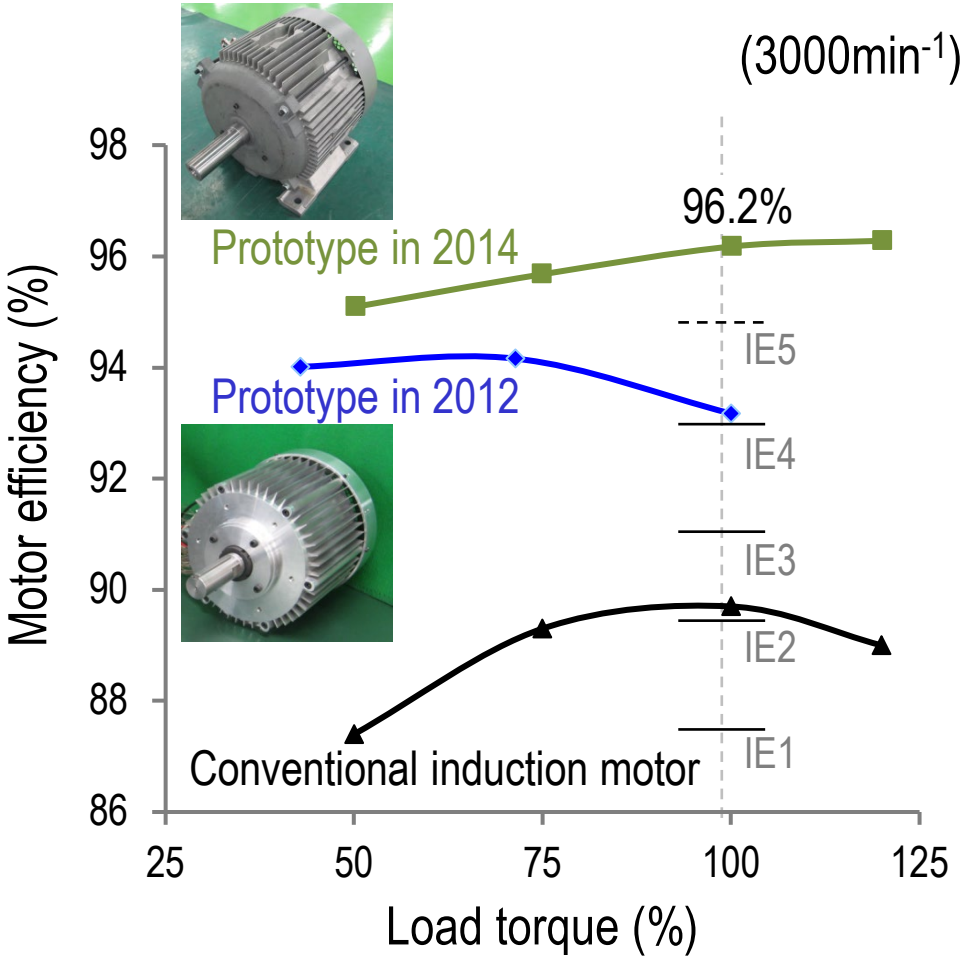

Motor efficiency of trial motor (11 kW)

1-6 Scroll Compressor

HITACHI
Inspire the Next

We had developed new compressor with integrated amorphous motor.
The package size had reduced to 37% of the previous model.

Conventional

IE3 Induction motor

Developed

IE5 Amorphous motor
- Shortening the motor shaft by 40%
- Cutting motor loss by 40%

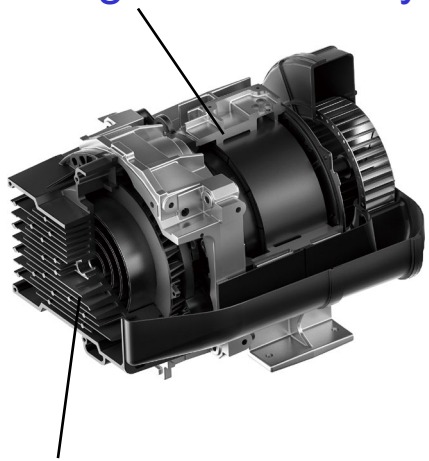

OILFREE SCROLL
×
Amorphous motor
7.5kW / 5.5kW / 3.7kW

Reference :
Hitachi Industrial Equipment Systems Co., Ltd. News release 2017.2.13

HITACHI
Inspire the Next

2. Study for Further High Efficiency

2-1 Loss Composition of IE5 Amorphous Motor

HITACHI
Inspire the Next

To further increase efficiency, it is necessary to reduce the loss of (a), (b) and (c).

11kW prototype in 2014

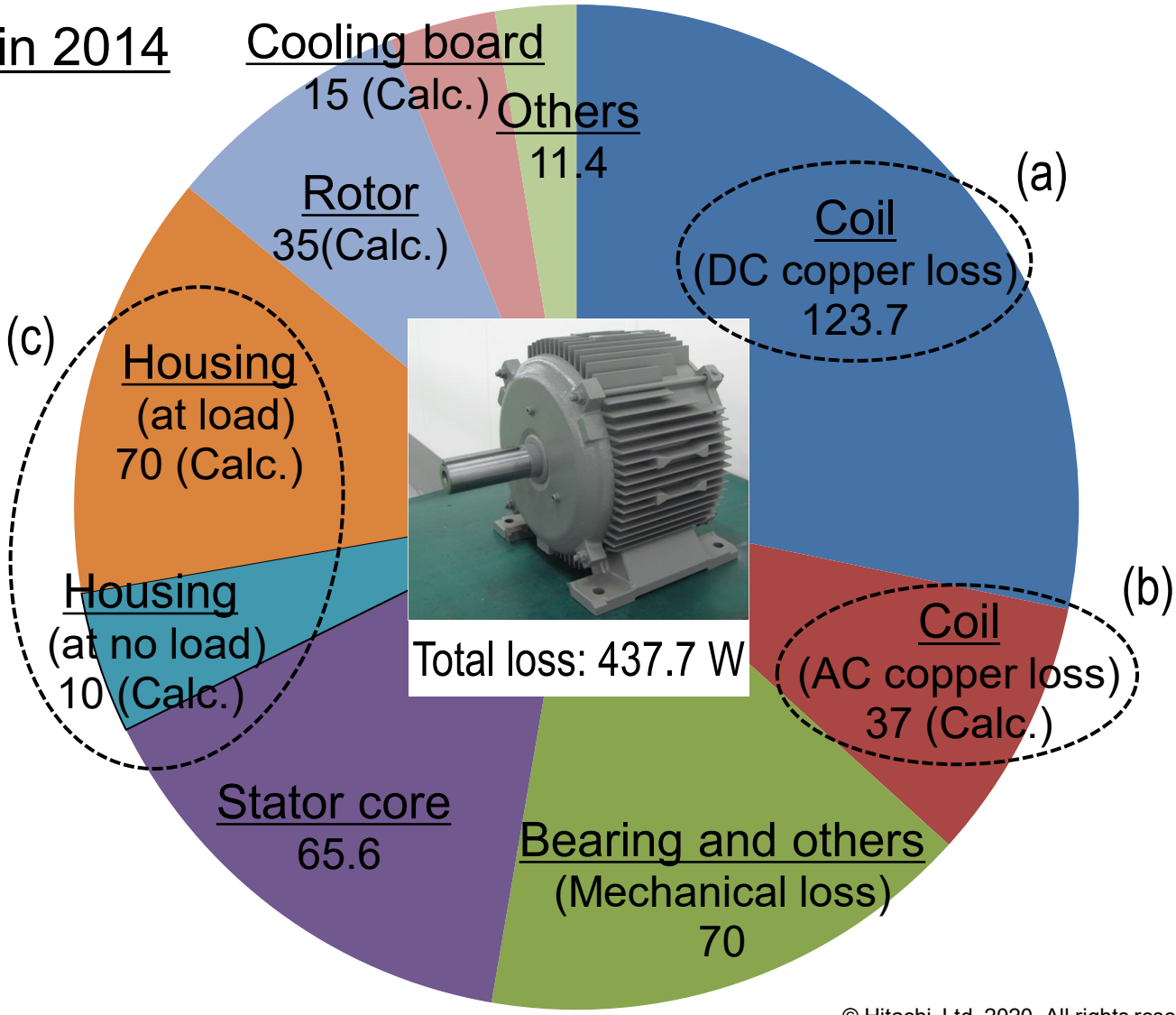

2-2 Loss Reduction Measures

HITACHI
Inspire the Next

Loss reduction of IE5 amorphous motor by new material and structure

Type of loss	Countermeasure policy	Concreate means
(a) DC copper loss	Decrease of current: - Increase of magnetic flux	✓ High-Bs nanocrystal ✓ High-Br bond magnet
(b) AC copper loss	Decrease of electrical resistance: - Increase of coil diameter - Decrease of number of coil turns	✓ Low loss coil using multiple fine wires
(c) Housing loss	Decrease of eddy current: - Increase of electrical resistance	✓ Non-magnetic and non-conductive ceramic housing

2-3 Reduction of Copper Loss (2)

HITACHI
Inspire the Next

We reduced copper loss by increasing magnetic flux and reduction of resistance.

	Conventional	Developed
Magnet	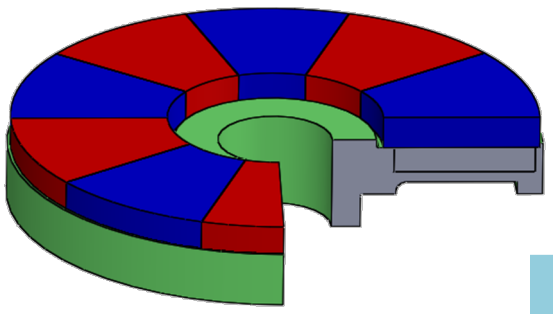 Ferrite sintered magnet (Br = 0.46T)	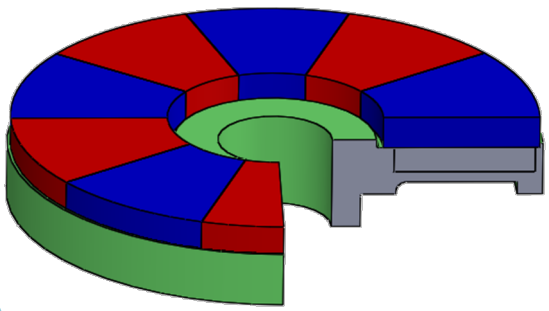 Bond magnet (Br =0.8T)
Core	Amorphous metal	High-Bs nanocrystal
Coil	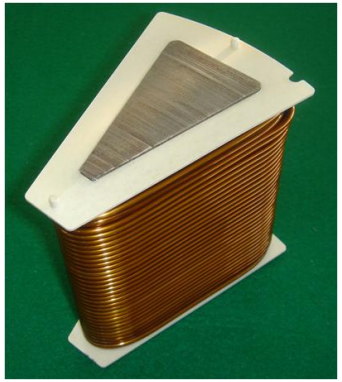 Φ1.6-2parallel X 98turn (2Δ)	 Φ1.0-6parallel X 80turn (4Y)

Increasing magnetic flux (Reduction of input current and number of coil turns)

Reduction of winding resistance

2-4 Countermeasures for Housing Loss

HITACHI
Inspire the Next

Ceramics is an excellent material for both resistivity and strength.

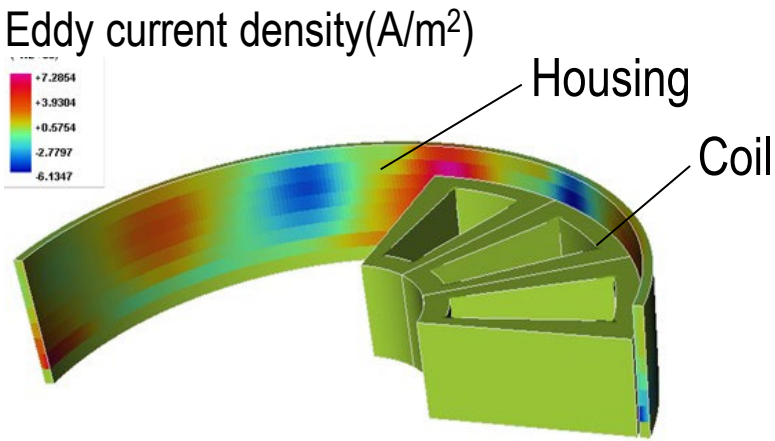

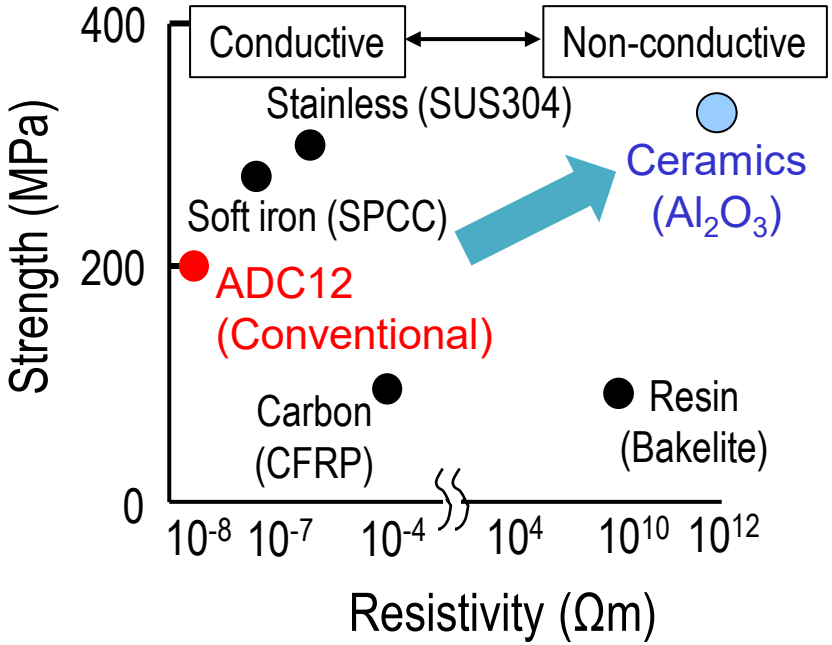

Eddy current at Al housing

Material strength and resistivity

Since it is difficult to make the leakage flux zero, we focused on housing material.

2-6 11kW-Nanocrystal Motor

HITACHI
Inspire the Next

The test motor is the same size as the IE5 11kW-amorphous motor in 2014.

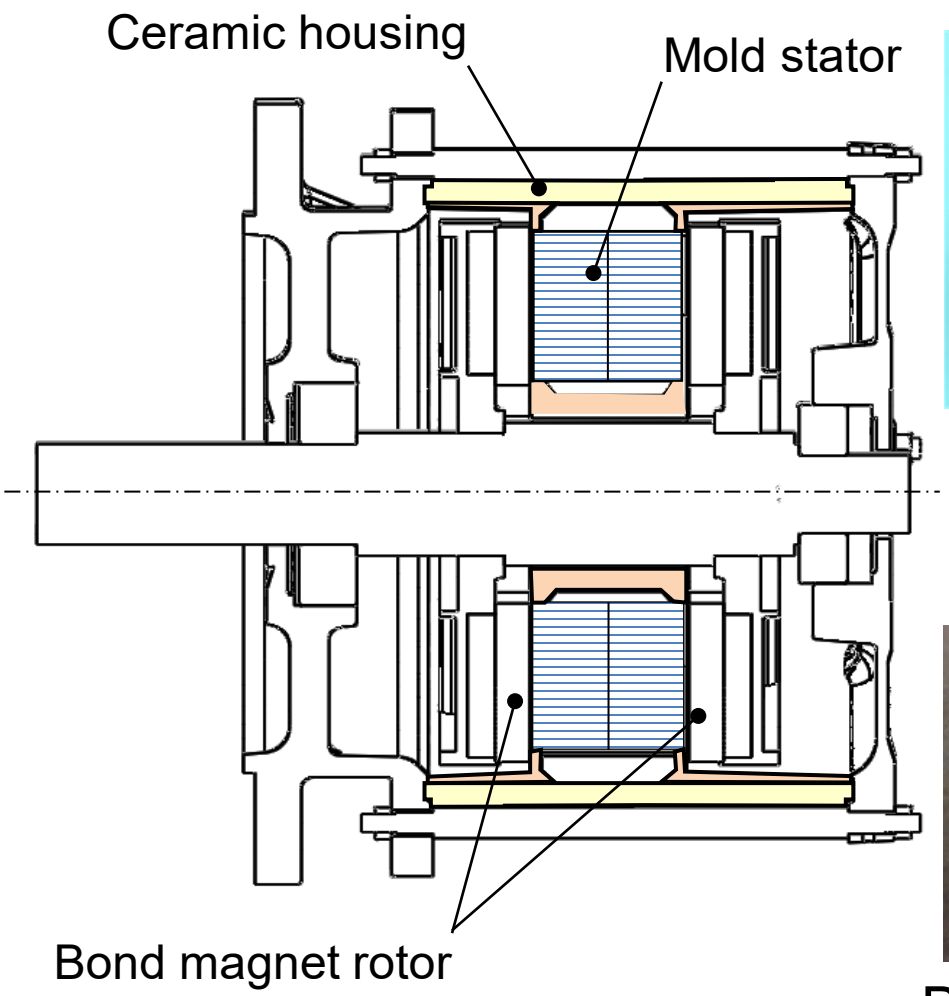

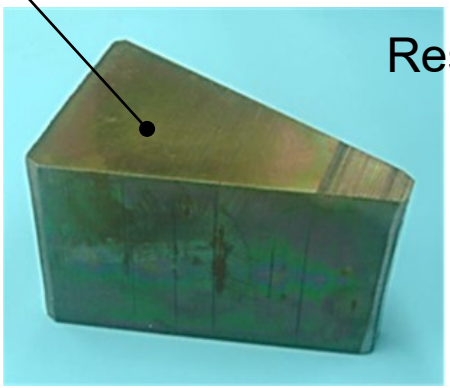

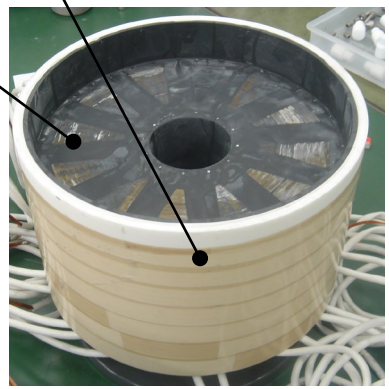

Mold stator

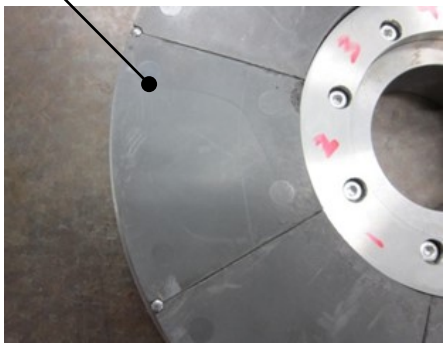

Bond magnet rotor

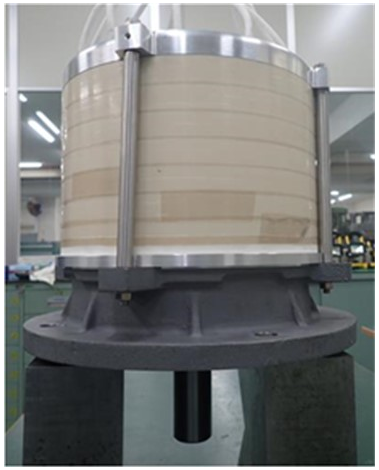

External view

2-9 Loss Composition

HITACHI
Inspire the Next

Total loss is reduced by 40%, mainly in coils and housing.

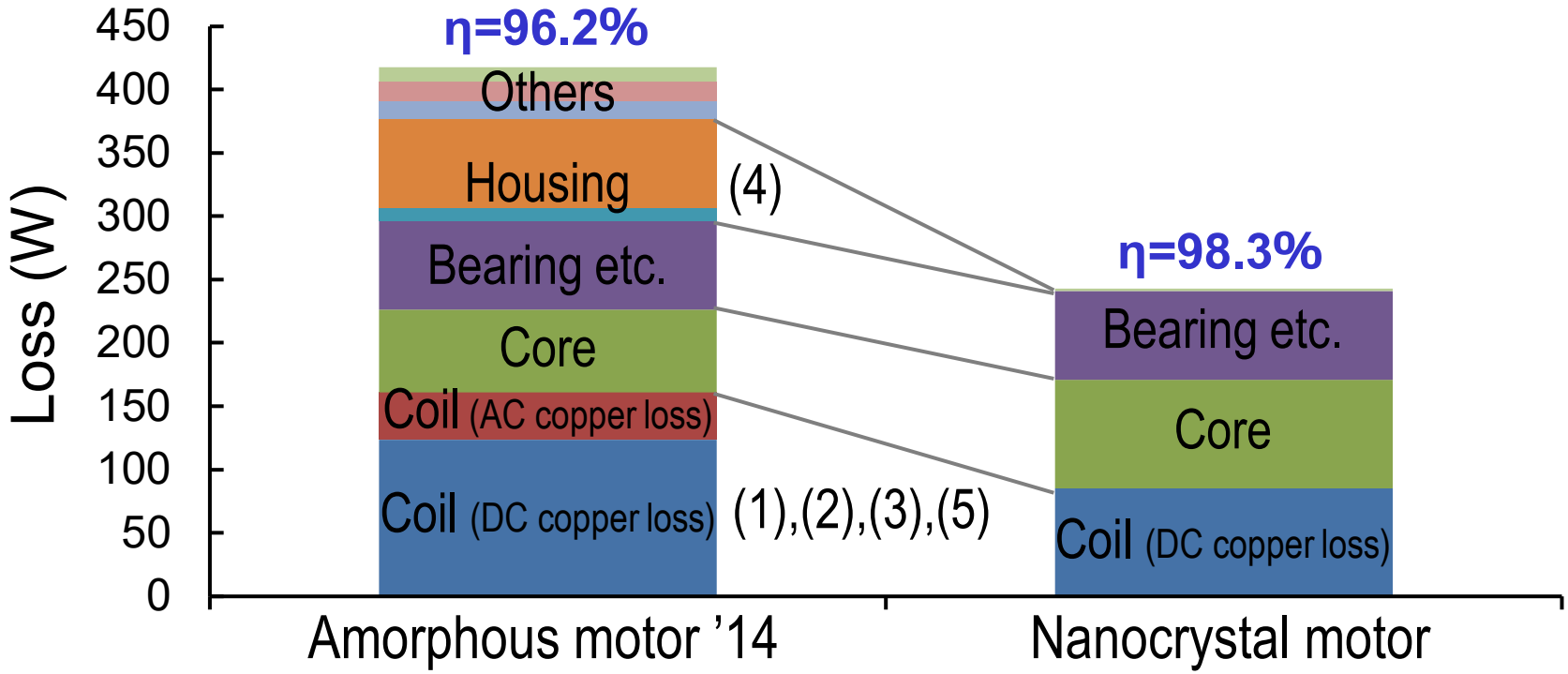

Rotor	(1)Magnet	Ferrite sintered magnet	High-Br bond magnet
Stator	(2)Core	Amorphous metal	High-Bs nanocrystal
	(3)Coil	Φ1.6X2X98turn-2Δ	Φ1.0X6X80turn-4Y
	(4)Housing	ADC12	Al_2O_3
	(5)Resin	BMC	High thermal conductivity resin

HITACHI
Inspire the Next

3. Deployment to Radial Gap Type Motor

3-1 Motor structure with teeth made of amorphous metal

HITACHI
Inspire the Next

Amorphous laminated teeth are constructed by following the shearing method.

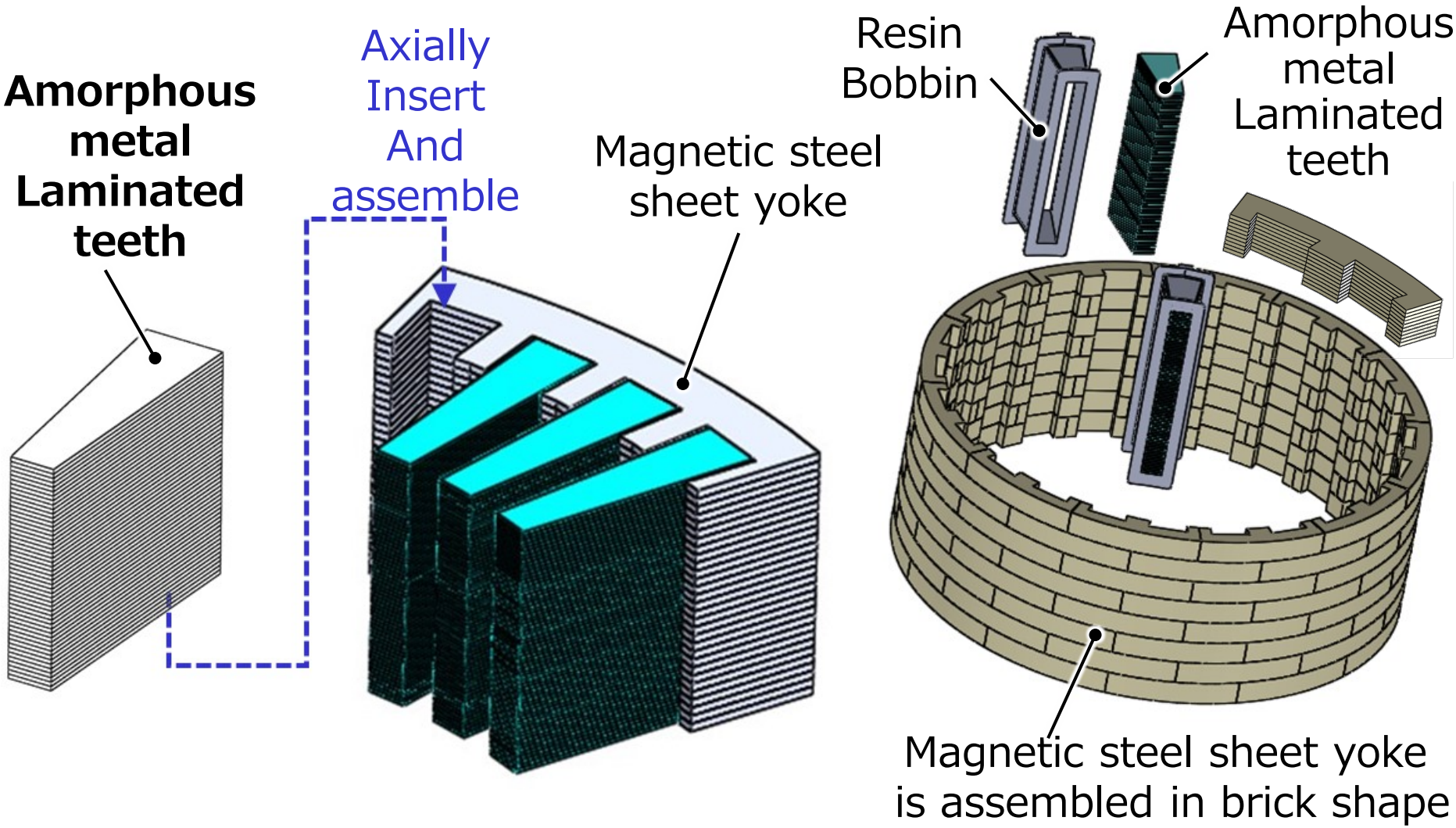

3-2 Target specifications of motor

HITACHI
Inspire the Next

11kW industrial motor (equivalent to 2P machine) was set as the target value

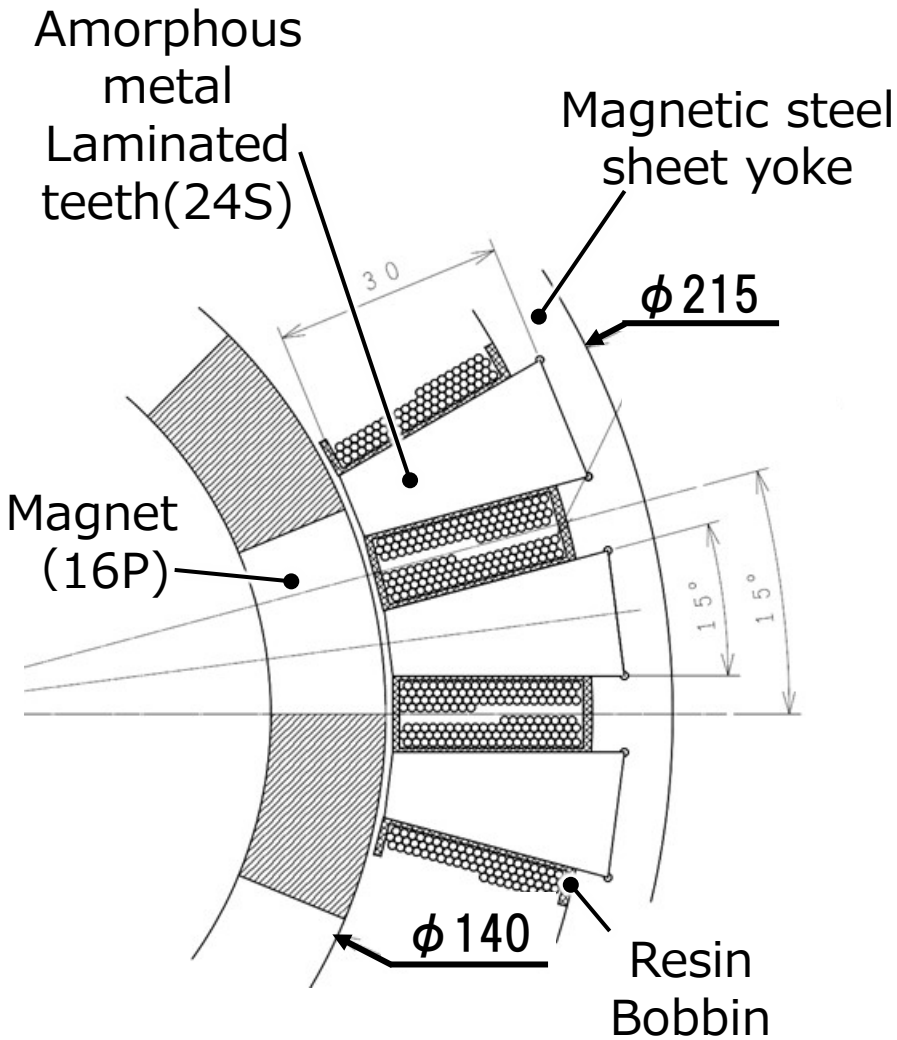

Target specifications

Item	Specifications
Rated power	11kW
Rated speed	3000r/min
Rated torque	35N･m
Structure	Radial gap type, SPM (Surface Permanent Magnet)
Voltage	3Ph 200Vrms (DC288V)
Rated current	35Arms
Volume	Φ240mm×L120mm
Efficiency	95% or more (IE5)

3-3 Calculation results of iron loss of stator

HITACHI
Inspire the Next

If amorphous metal is used only for the teeth, the iron loss can be reduced to about 1/3.

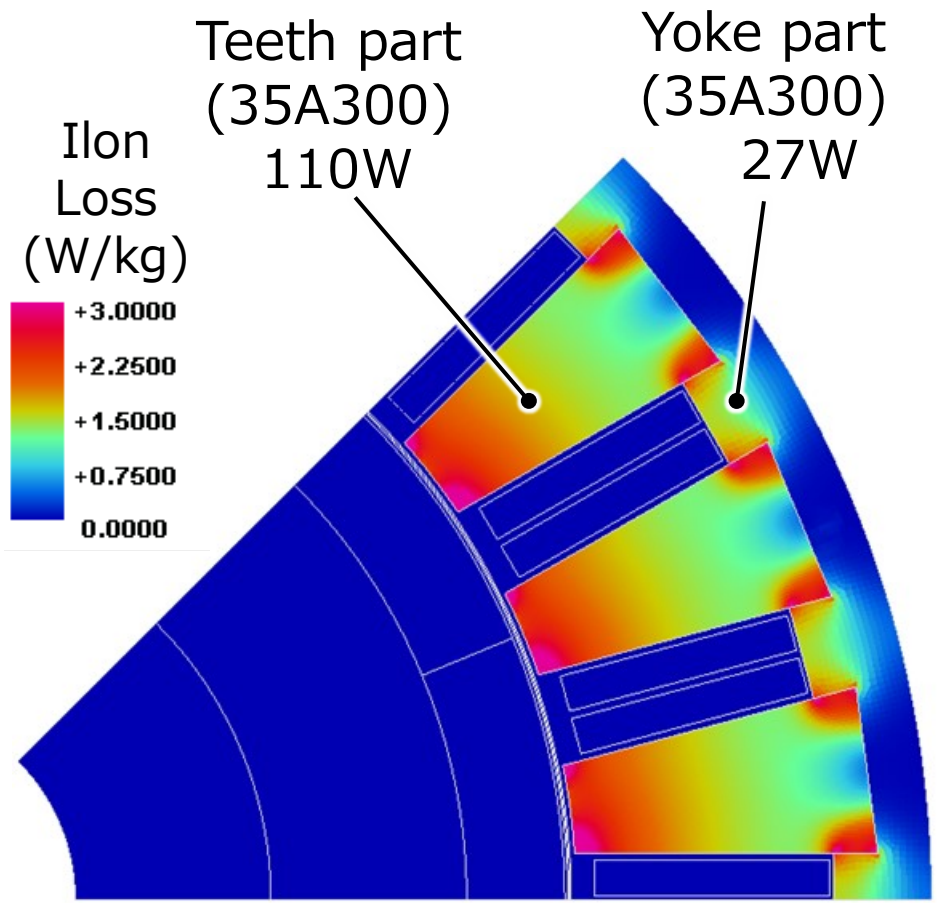

All stator cores are magnetic steel sheets

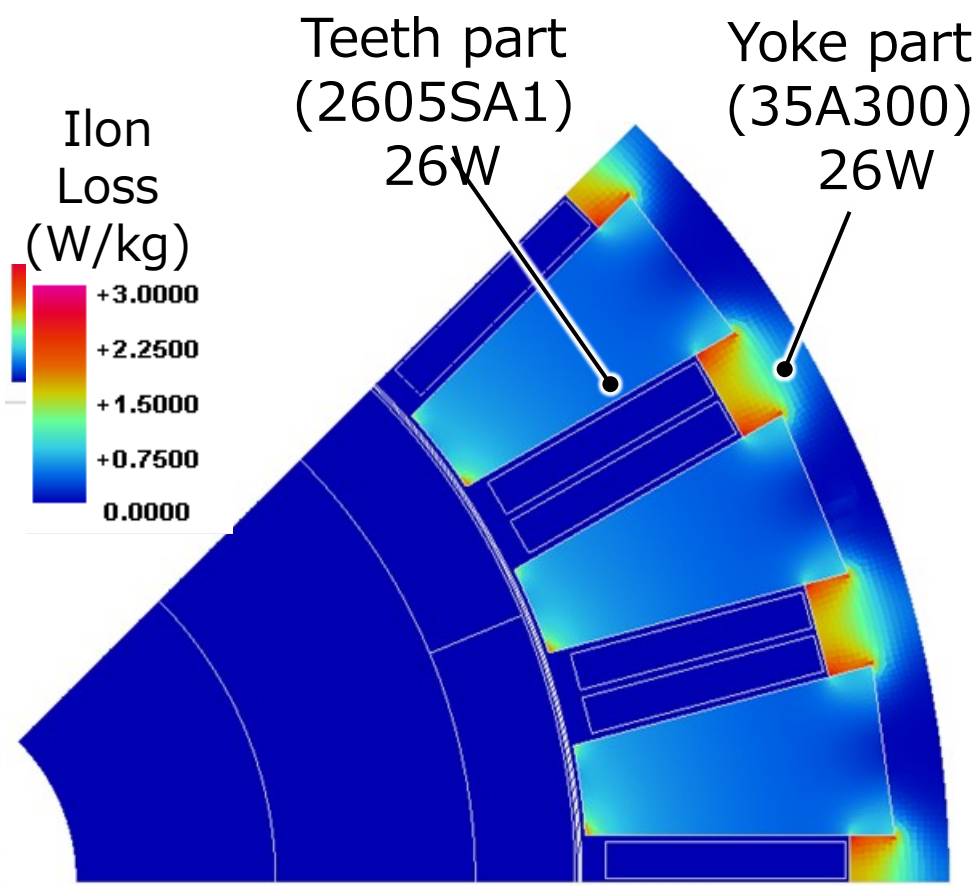

Teeth part is amorphous metal

3-4 Structural design of amorphous motor

HITACHI
Inspire the Next

Motor volume achieved the target specification

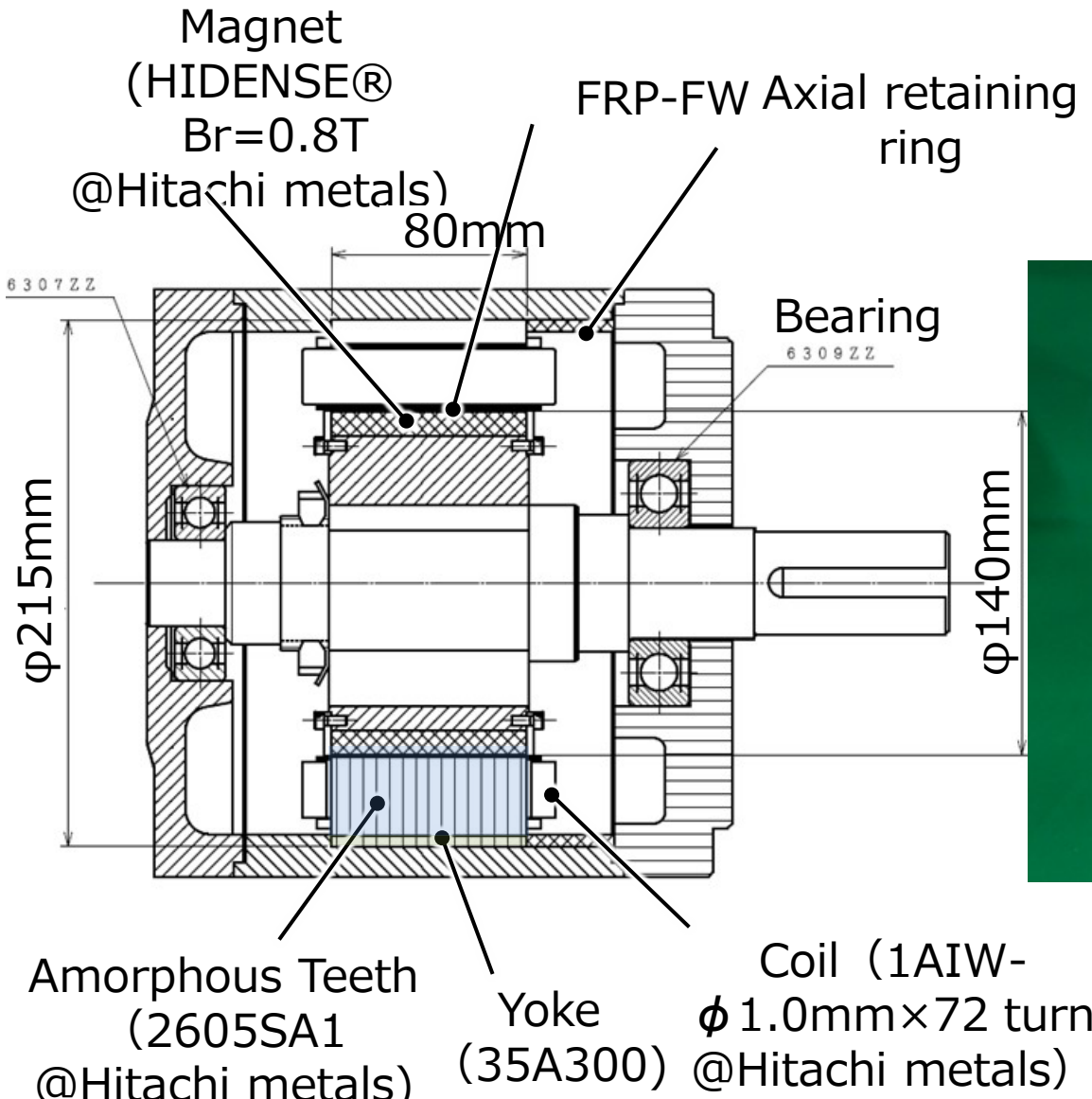

Appearance of prototype motor

3-5 Detailed structure of each part

HITACHI
Inspire the Next

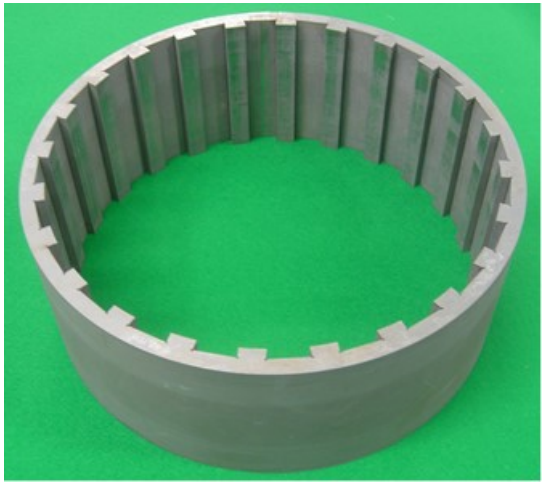

Yoke Core（35A300）

Teeth part
（2605SA1）

Teeth part
（Bobbin）

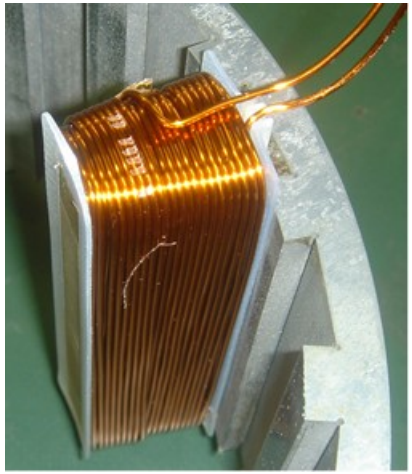

Teeth part
（Inserted state）

Rotor assembly
（Magnet : HIDENCE®）

Terminal
connection

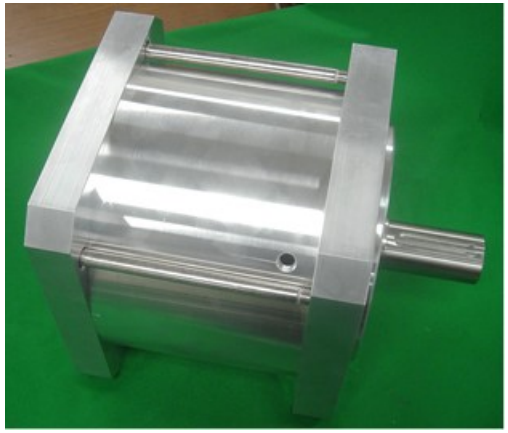

Motor assembly

3-6 Efficiency evaluation of prototype motor

HITACHI
Inspire the Next

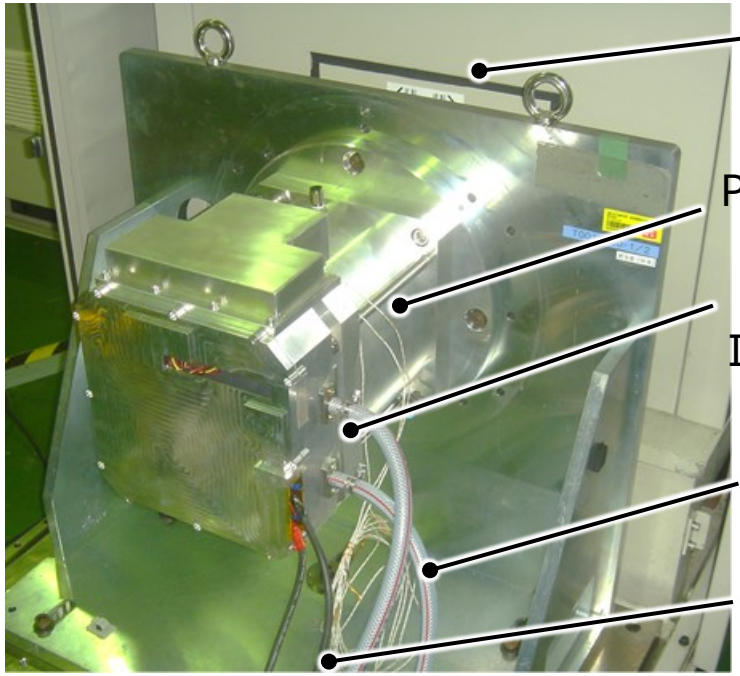

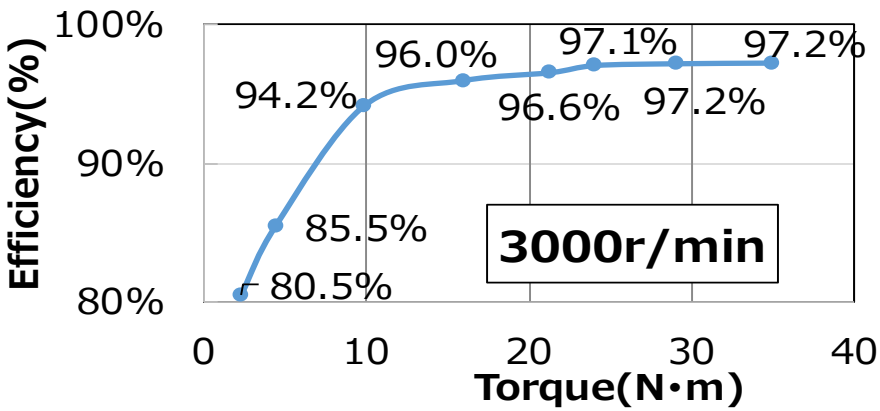

Efficiency of prototype motor

■ Comparison with IE5 axial type

	IE5 (axial gap type)	Amorphous teeth(Radial)
appearance		
Rated Power	3000r/min 11kW	3000r/min 11kW
specification	10P-12S (SPM) Magnet : NMF-12G (Br=0.48T)	16P-24S (SPM) Magnet : HIDENCE (Br=0.8T)
Volume	6.9L Φ260×130	3.6L (1/2) Φ215×100
Weight	36kg	18kg (1/2)
Efficiency	96.2 (measured)	97.2 (measured)

4. Conclusion

4-1 Conclusion

HITACHI
Inspire the Next

In this presentation, we explained the technology for further improving the efficiency of amorphous motors and the technology for expanding the applications.

<u>High efficiency technology</u>

- We proposed new axial gap type motor with high-Bs nanocrystal core and ceramic housing to reduce copper loss and housing loss which dominate in axial gap type amorphous motor.
- The motor efficiency was improved from 96% to 98%.

<u>Expanded application technology</u>

- We proposed radial type amorphous motor consisting of amorphous teeth and electrical steel sheet core back.
- The amorphous teeth can be manufactured with relatively simple processing.
- The prototype motor achieved an efficiency of 97%.

Some of these developments are granted by the New Energy and Industrial Technology Development Organization(NEDO) through the “Funding program for development of realization technology for replacement and reduction of rare-earth metal”.

Contact Information

HITACHI
Inspire the Next

Hirooki Tokoi

Hitachi,Ltd. Research & Development Group

1-1, Omika-cho 7-chome, Hitachi-shi, Ibaraki-ken, 319-1292 Japan

Tel:+81-70-4267-3578

E-mail:hirooki.tokoi.fe@hitachi.com

HITACHI

Inspire the Next