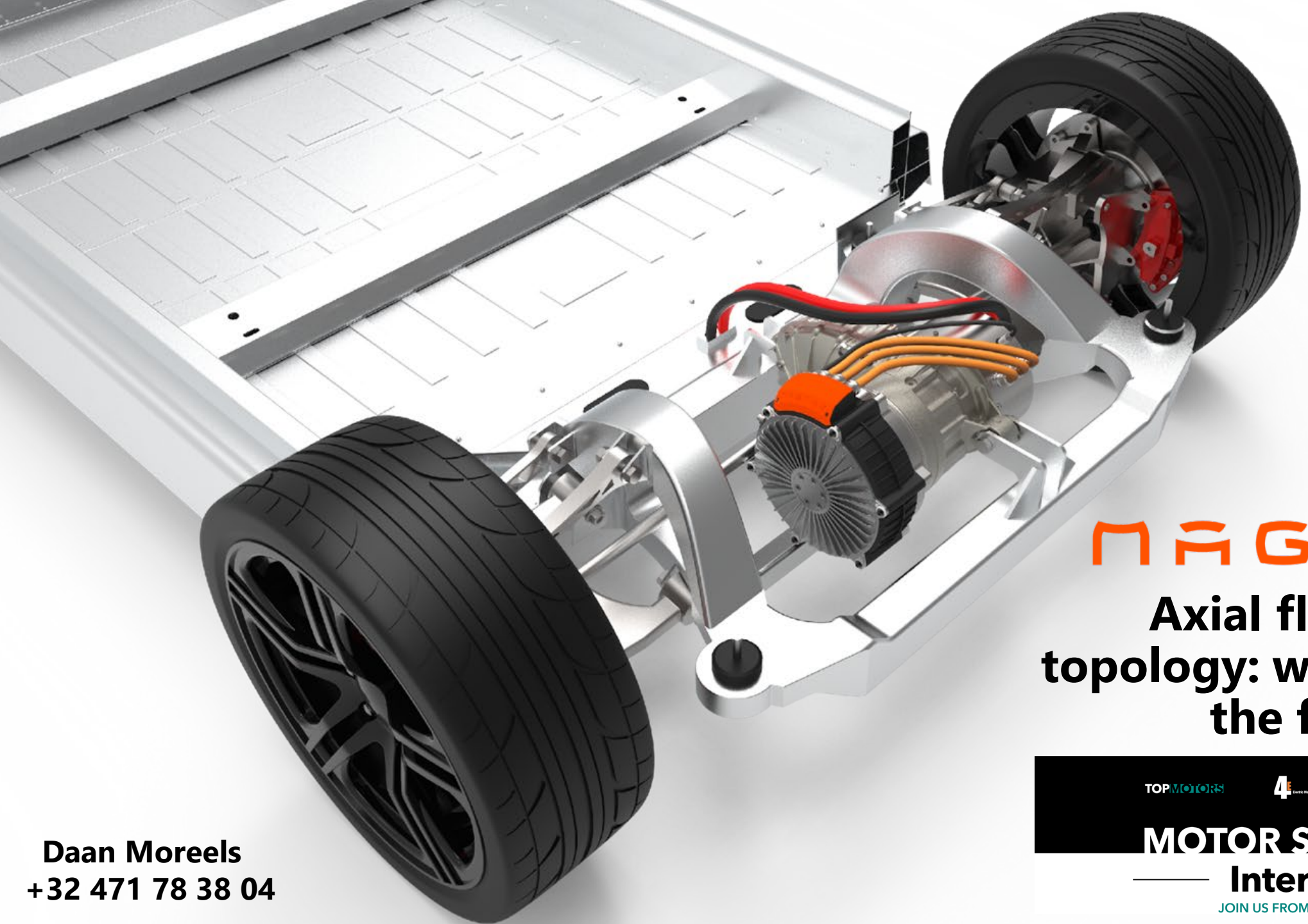

MAGNAX

# Axial flux motor topology: will it dominate the future?

TOPMOTORS 4E Electric Motor Systems IMPACT ENERGY SWISSenergy

MOTOR SUMMIT 2020

International

JOIN US FROM HOME VIA LIVE STREAM

LIVE STREAM

**Daan Moreels**
**+32 471 78 38 04**

# Yokeless Axial Flux Topology

Traditional Motor = Radial Flux

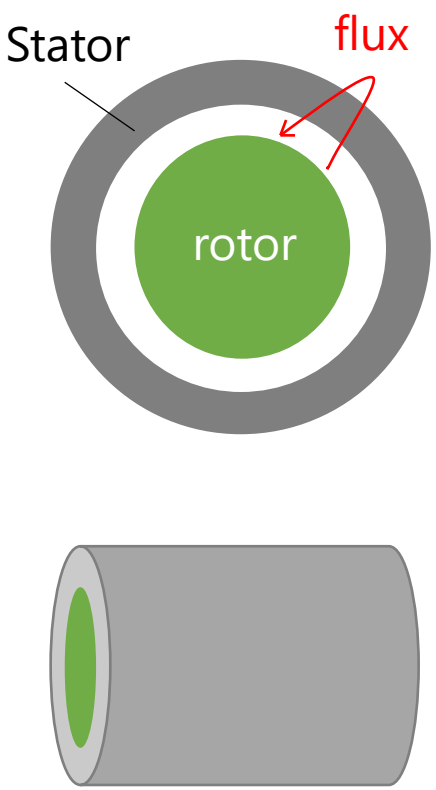


Yokeless Axial Flux

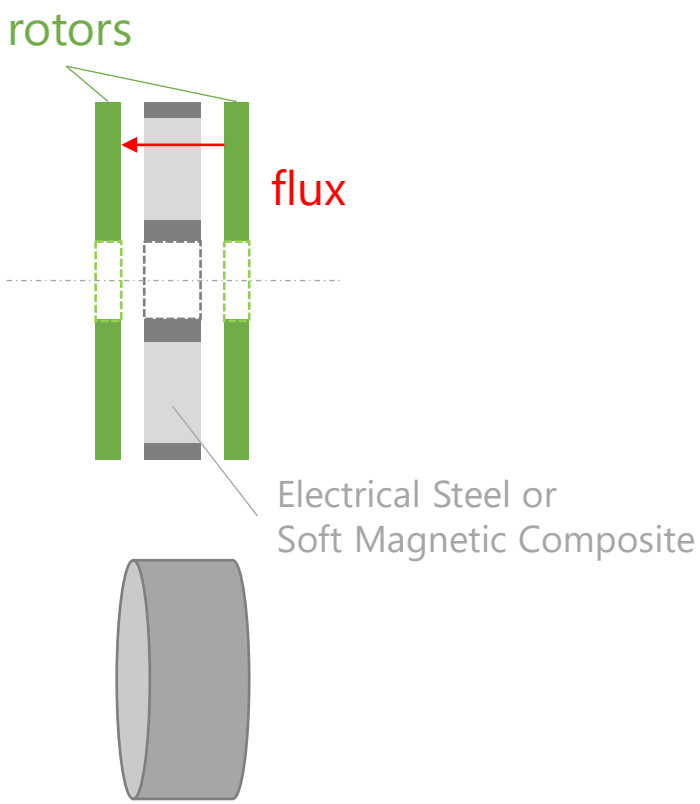


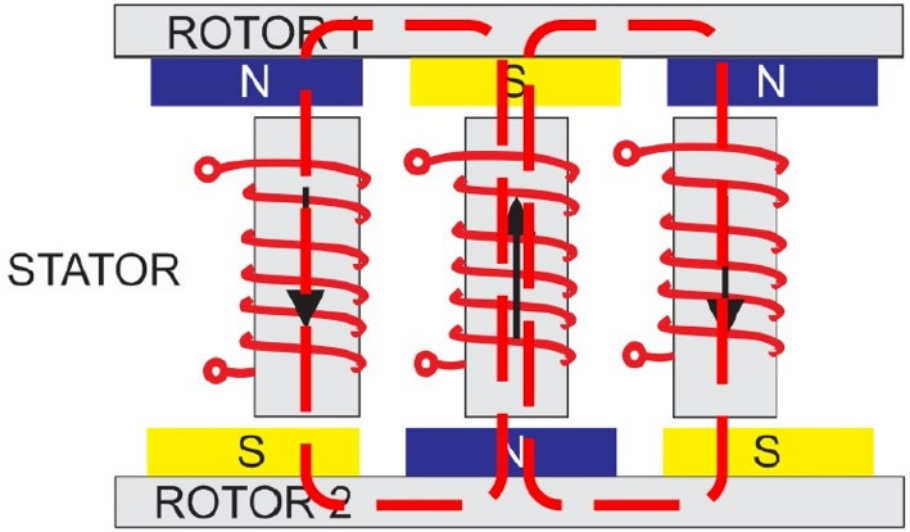

# Stator Yoke

MAGNAX

## Radial Flux Motor
(Yoked Design)

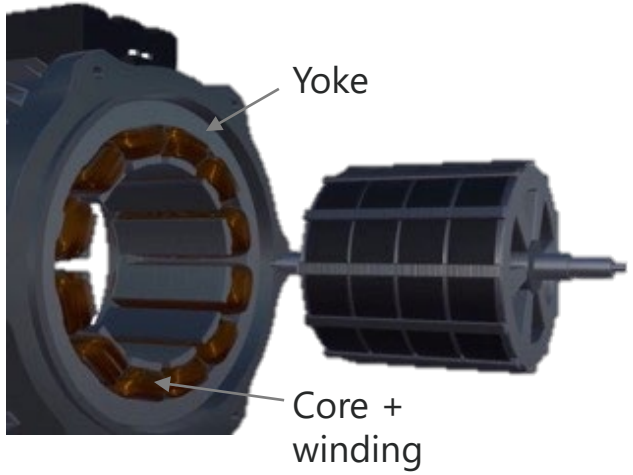


**99%**
**of the motors**
**today**

## Axial Flux Motor
(Yoked Design)

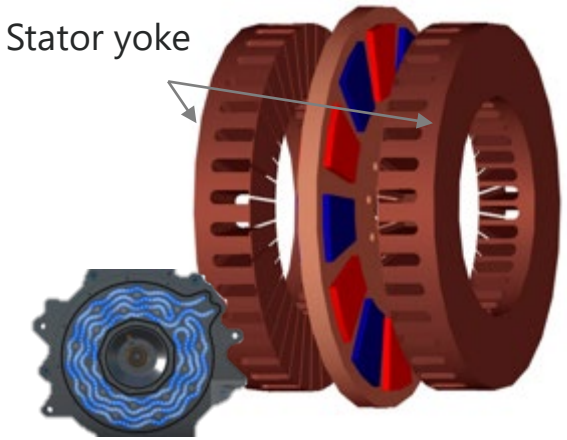


AVID technology

MAGELEC PROPULSION

Ashwoods ELECTRIC MOTORS

HEINZMANN

φ-power ag www.phi-power.com

## Yokeless Axial Flux Motor
(no stator yoke)

MAGNAX

YASA

# Prototype history

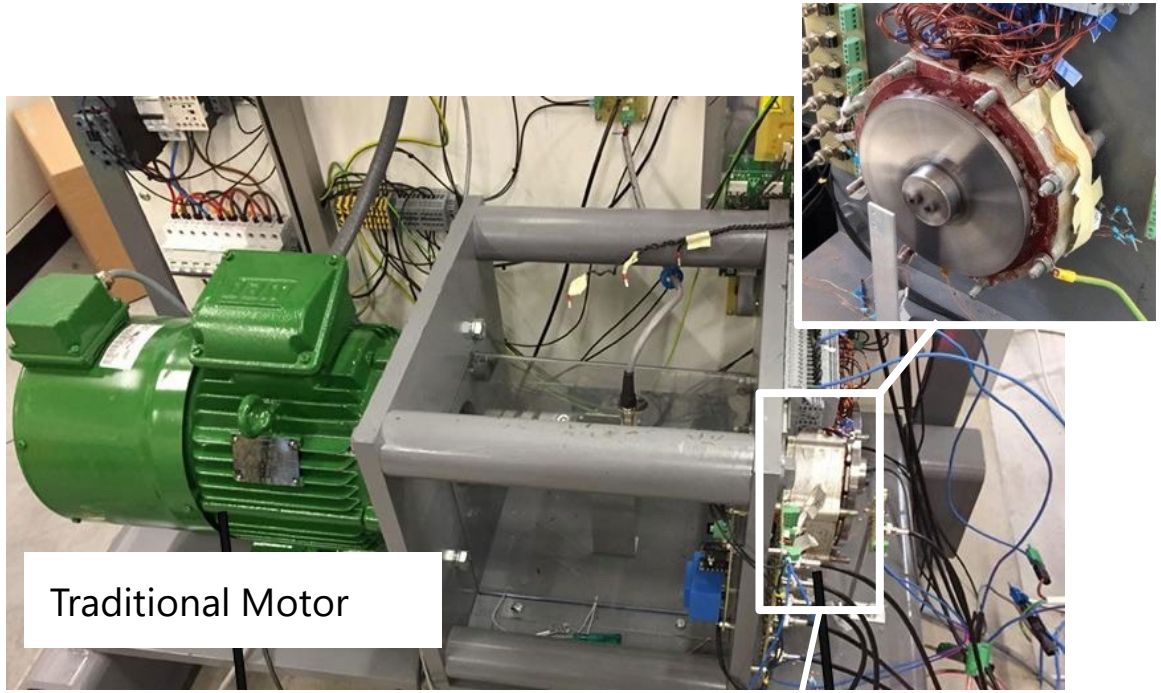


Magnax Yokeless Axial Flux Motor
Prototype 4kW

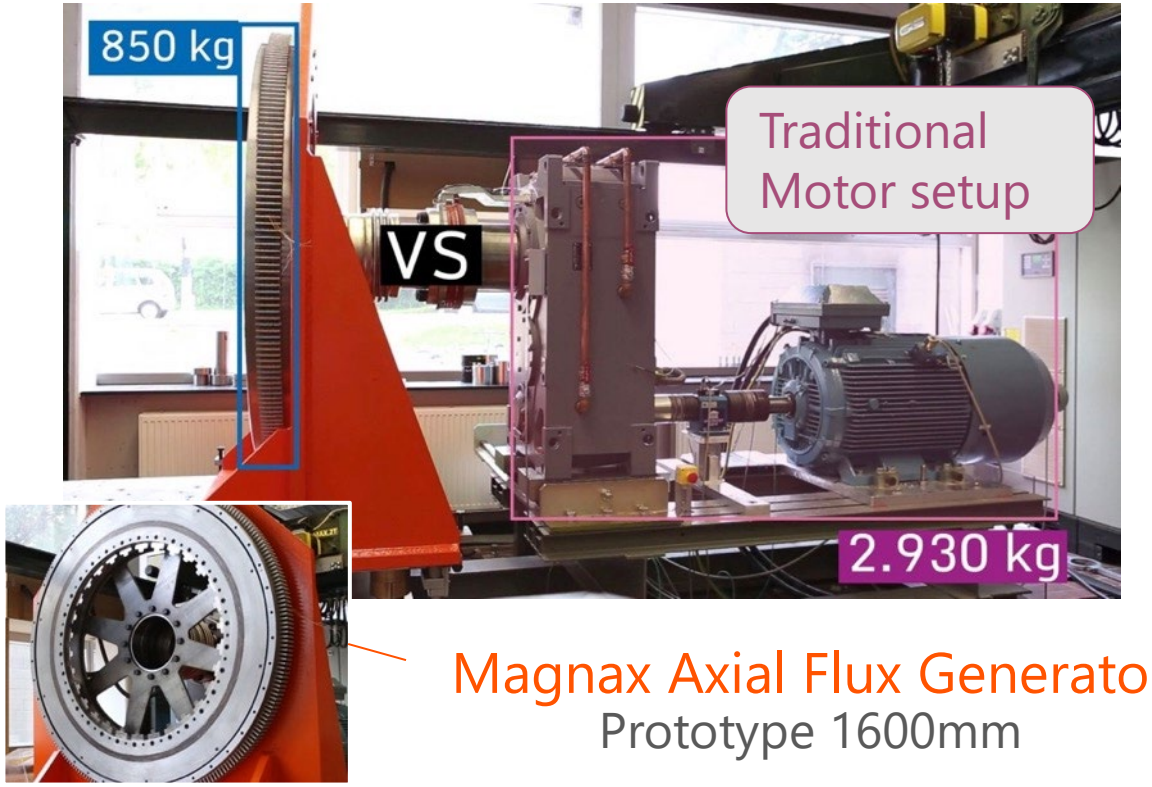


Magnax Axial Flux Generator
Prototype 1600mm

# Power Density

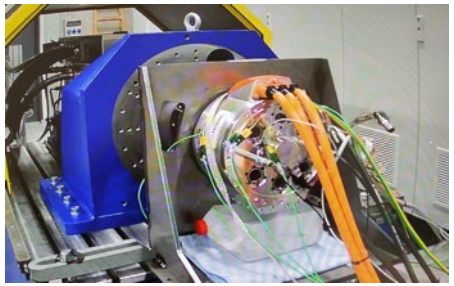

| | 2019 Tesla Model 3 Performance Radial Flux (Current State-of-the-art motor for EV's)[1] | Magnax Yokeless PM Axial Flux AXF290 (no housing) **Measured** values on prototype | Magnax Yokeless PM Axial Flux AXF290 (no housing) **Expected** values for production version | |
|---|---|---|---|---|
| eMotor Diameter (mm) | 280 | 290 | 290 | |
| Axial length (mm) | 264 | 138 | 124 | |
| Peak torque (Nm) | 433 | 510 @ 15 sec | >520 | |
| Max RPM | 18,000 | 10,000 | >12,000 | |
| Weight without housing (kg) | 46.1 | 25 | <25 | |
| Peak power (kW) | 238 | 325 @ 7,000 rpm 15 sec | >420 @ 15 sec | |
| Max Power Density (kWp/kg) | **5.2** | **13** | **>16** | |
| Magnet mass per kWp (gram) | 9.7 | 9.1 | 7.1 | -26% |
| Copper mass per kWp (gram) | 29.4 | 10.6 | 7.5 | -74% |
| Stator iron mass per kWp (gram) | 54 | 37.8 | 29.3 | -46% |

***Light and compact***

Low material use

***Cost-effective***

# Iron Losses, important for vehicle range

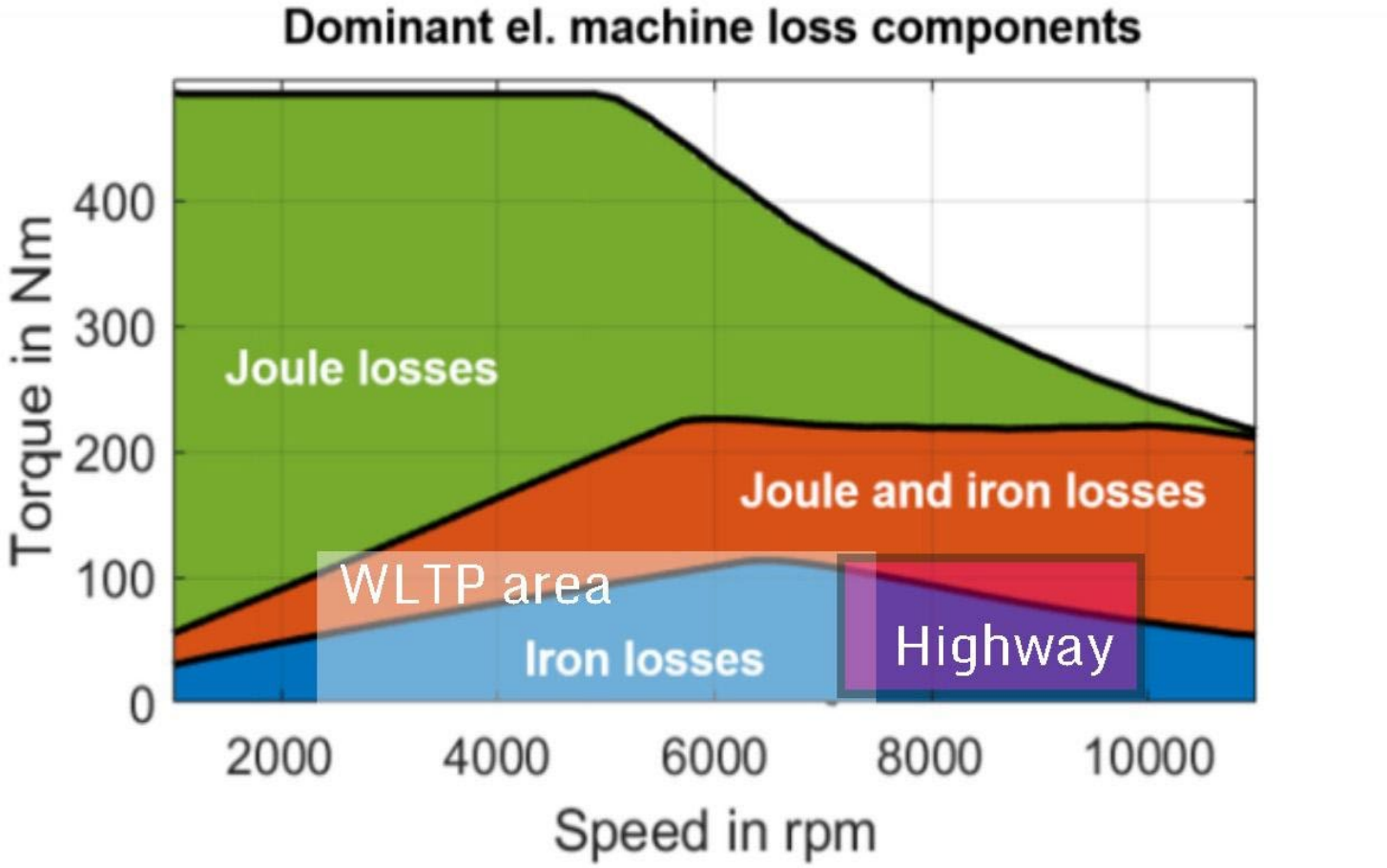


Source: valeo

# More vehicle range

## BMW i3 radial flux eMotor

→ Area of high efficiency not aligned with common operating points

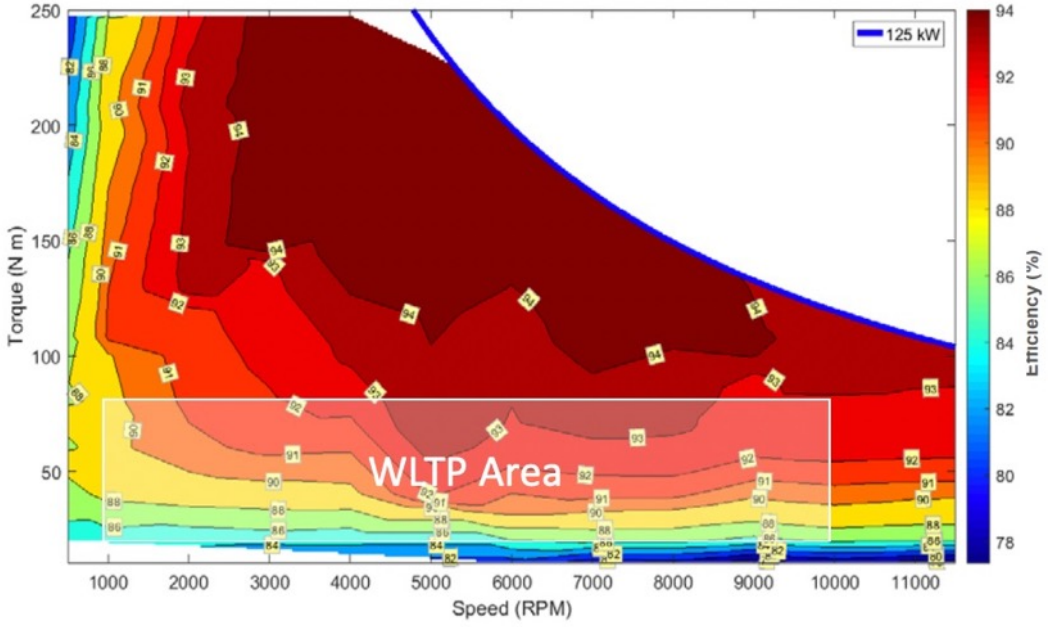


## Magnax AXF250 yokeless axial flux eMotor

→ High efficiency where needed

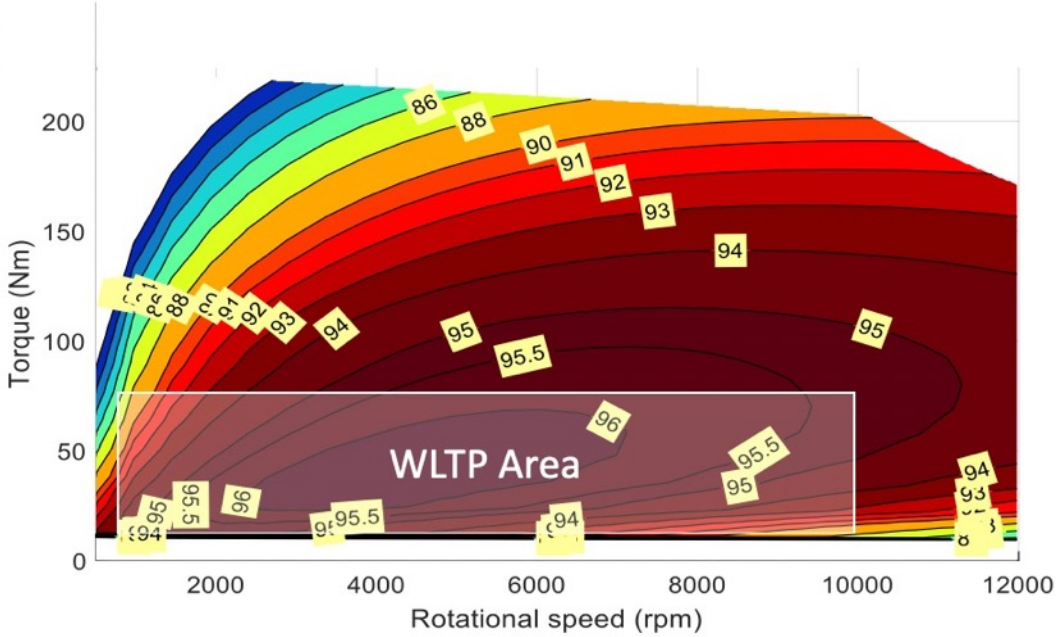


Up to 25,9 % additional vehicle range with yokeless axial flux

# Gearbox + Magnax standard Motor

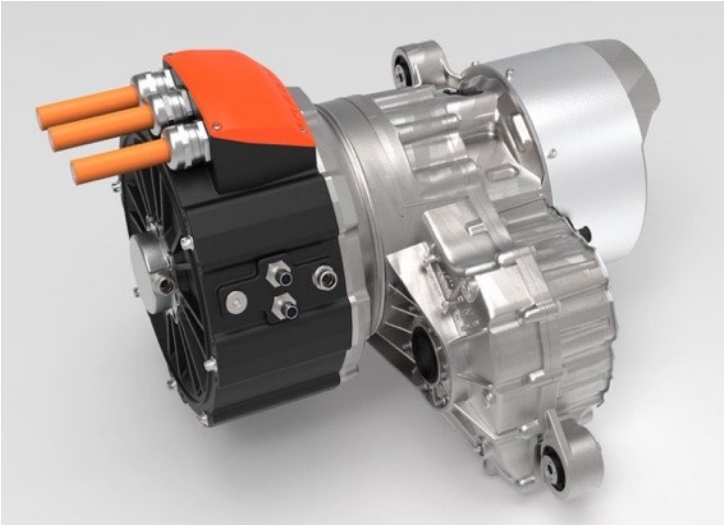

Layshaft – single motor

Layshaft – Dual motor
Single speed or Dual speed

Co-Axial with 1-speed
planetary gearbox

# Use short axial length to your benefit

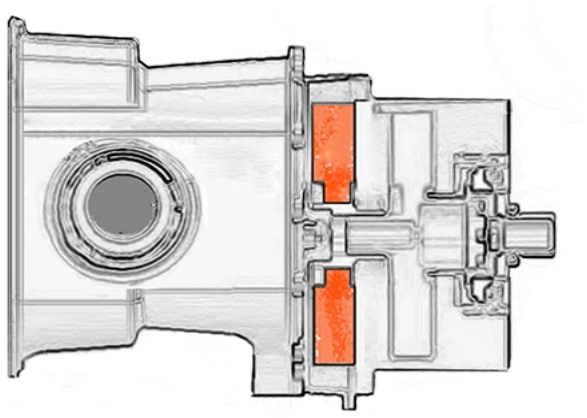

Yokeless AF motor
<80 mm axial length

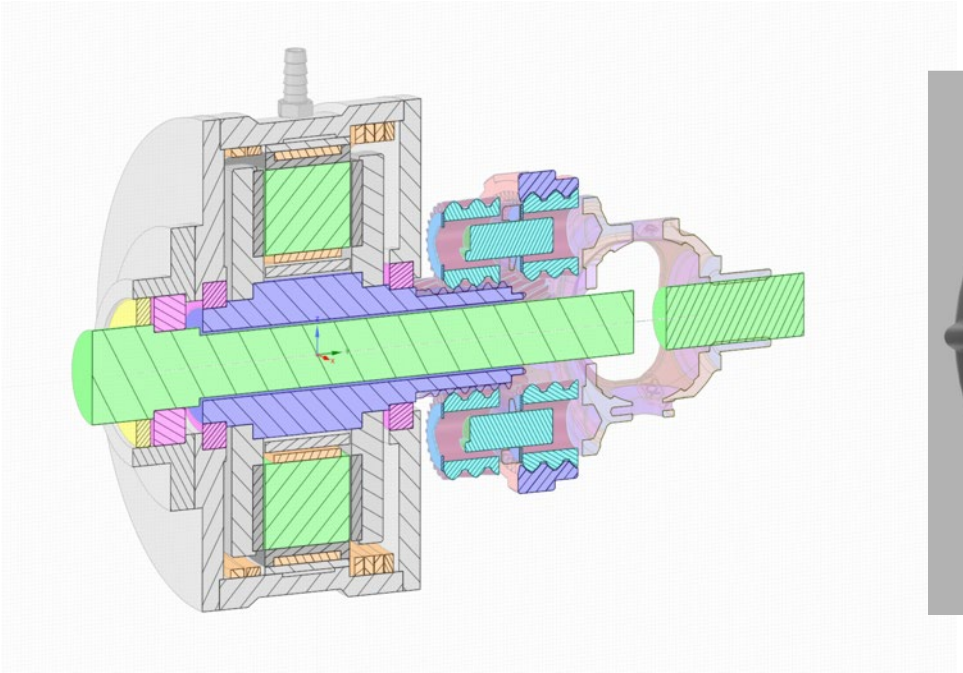

Yokeless AF motor
Co-Axial eAxle design

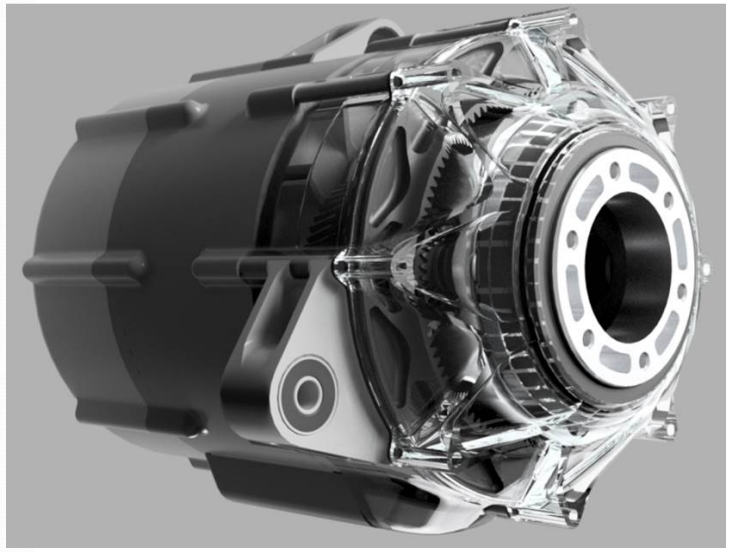

Yokeless AF motor
+ SiC Inverter
+ 1-speed planetary gbx

# Magnax Yokeless Axial Flux eAxle Modules

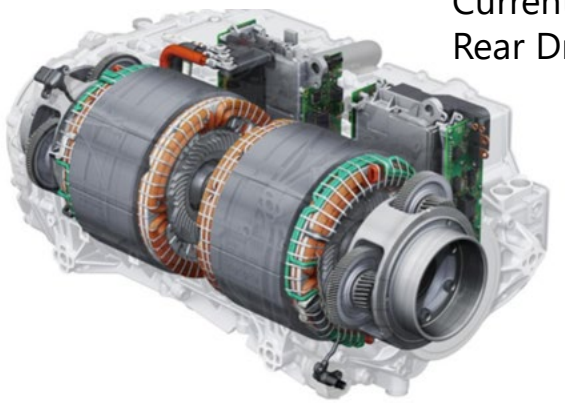

Current e-Tron
Rear Drive Unit

**Audi Rear Drive Unit with Induction motors**
618 Nm
155 kg

1960 mm

1890 mm

**Magnax Permanent Magnet axial flux eAxle unit**
620 Nm
82 kg (2x 41kg)

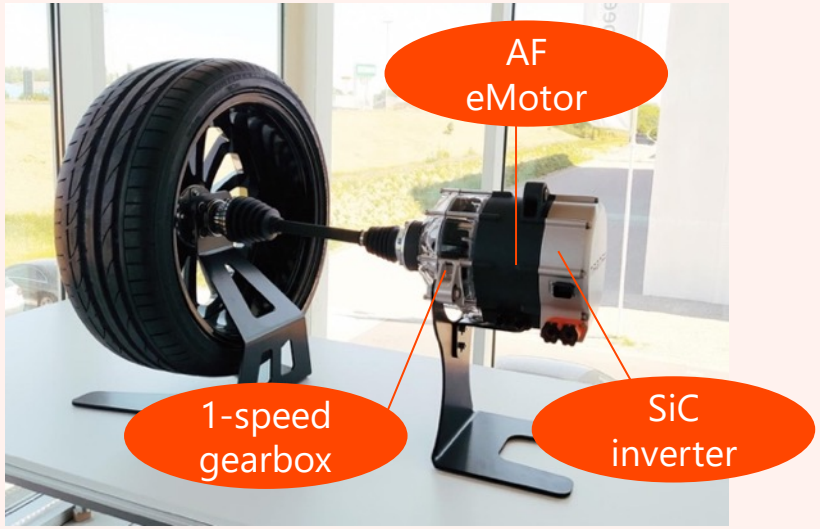

# More info:
# www.magnax.com

Daan Moreels
+32 471 78 38 04
daan.moreels@magnax.com